Oswal Pumps Ltd.

ISI · ISO 9001:2015 · BEE 5-Star

OSWAL
PUMPS & MOTORS
True Partner!

Oswal Submersible Motors

Stainless-steel, water-filled rewindable submersible motors · 4″ OSF-100 · 6″ OSL-150 · 6″ OSF-150 · 8″ OSF-200 · 50 Hz & 60 Hz

Energy-efficient range | Product information & service manual · Cat. No. M03/2024 · NEMA mounting · IP68

1.5–93 kW	**4″ · 6″ · 8″**	**50 & 60 Hz**	**IP68**
2–125 HP	NEMA frames	380–415 V · 460 V	water-filled, rewindable

www.oswalpumps.com

CONTENTS

Submersible Motors · 4″ · 6″ · 8″

Introduction P. 3

Company profile 3
Range overview · name-plate serial number 4

4″ OSF-100 P. 5

General information · technical specification 5
Construction · material · dimensions 6
Outline drawing · motor leads · insulation 7
Performance data 50 Hz & 60 Hz 8

6″ OSL-150 · OSF-150 P. 9

General information · technical specification 9
OSL-150 outline · dimensions & weights 10
OSF-150 cut drawing · dimensions & weights 11
Outline · couplings · insulation resistance 12
Exploded view & MOC — OSL-150 13
Exploded view & MOC — OSF-150 14
Performance data 50 Hz 15
Performance data 60 Hz 16
De-rating curves 17

8″ OSF-200 P. 18

General information · technical specifications 18
Cut drawing · material · weights · cable leads 19
Performance data 50 Hz 20
Exploded view & spare parts 21
Outline drawing 22

Installation & service P. 23

General safety · storage · transport · disposal 23
Motor operation · converter · soft starter · troubleshooting 24
Motor fluid · name plate · insulation resistance 25
Cable sizing — DOL 26
Cable sizing — star-delta 27

Motor selection & service support

Share the pump duty, borewell size and supply voltage — our team will recommend the right Oswal motor, cable and starter.

1800-120-1882

info@oswalpumps.com · WhatsApp +91-98962-66691

COMPANY PROFILE

An integrated pump & motor manufacturer since 2000

Oswal Pumps Limited, started in the year 2000, has become India's first unique integrated plant of its kind — a world-class manufacturing facility backed by seasoned engineers and technicians.

Quality, service and value for the customer's money are the guiding principles at Oswal. Oswal is one of the fastest-growing companies in submersible pumps, monoblock pumps and electric motors, pressure pumps, electric panels, submersible winding wires, cables and uPVC pipes — covering the domestic, agricultural and industrial range — and one of India's leading and largest manufacturers of stainless-steel pumps and submersible motors.

2000
year established

45,000 m²
own plant on NH-1 near Kutail, Karnal

1,170+
distributors / agents across India

20
export countries — heading to 50

In-house manufacturing

- Stamping unit
- Aluminium die-casting for rotors
- Aluminium die-casting for motor bodies & parts
- Poly-wrapped & PVC winding wire for submersible motors
- Thrust bearings
- Plastic injection mouldings
- Stainless-steel investment casting
- Stainless-steel pipe
- Corrugated box facility
- Cast-iron casting plant
- Super-enamelled copper wire plant

Quality

- **ISO 9001:2015** certified company; products are **ISI** and **5-Star BEE** marked.
- More than 1,000 product varieties offered through a wide network of more than 1,170 distributors and agents — for every Oswal pump in use there is a sales and service outlet nearby.

Awards

National Udyog Rattan Award
15-09-2005 · Indian Organization for Business Research Association, New Delhi — for individual achievement in national development.

Bhartiya Udyog Rattan Award
01-12-2005 · Indian Economic Development & Research Association, New Delhi — for individual achievement in national development.

Oswal was the first company out of a thousand participants to receive these awards for submersible pump sets.

Export

Exporting to 20 countries at present and heading to mark a presence in 50 countries. Oswal Pumps Limited assures you of quality products and the best service, always.

RANGE AT A GLANCE

Four motor series, 1.5 to 93 kW

Oswal rewindable submersible motors are water-filled (water-lubricated), stainless-steel motors with NEMA mounting for borewell pumps. A preloaded diaphragm compensates internal pressure; sand slinger and mechanical seal protect against sand.

4″ · 100 mm

OSF-100

Rating	1.5–7.5 kW
HP	2–10 HP
Frequency	50 Hz · 60 Hz
Axial thrust	4,000 N
Mounting	NEMA 4″, studs M8

6″ · 150 mm

OSL-150

Rating	4–45 kW
HP	5.5–60 HP
Frequency	50 Hz · 60 Hz
Axial thrust	15,500 / 27,500 N
Versions	SSJK · CI

6″ · 150 mm

OSF-150

Rating	4–45 kW
HP	5.5–60 HP
Frequency	50 Hz · 60 Hz
Axial thrust	15,500 / 27,500 N
Versions	SS-304 · CI

8″ · 200 mm

OSF-200

Rating	30–93 kW
HP	40–125 HP
Frequency	50 Hz
Axial thrust	45,000 N
Max. immersion	350 m

Identify your motor — name-plate serial number

S. No. **4 23 08 0001**

- Motor size (4 = 4″, 6 = 6″, 8 = 8″)
- Year of manufacture (e.g. 2023)
- Month of manufacture (e.g. 08 = August)
- Production serial number

Series comparison

Series	Size	Rating (kW)	Rating (HP)	Axial thrust (N)	Frequency
OSF-100	4″	1.5–7.5	2–10	4,000	50 & 60 Hz
OSL-150	6″	4–45	5.5–60	15,500 / 27,500	50 & 60 Hz
OSF-150	6″	4–45	5.5–60	15,500 / 27,500	50 & 60 Hz
OSF-200	8″	30–93	40–125	45,000	50 Hz

6″ thrust: 15,500 N up to 13 kW, 27,500 N from 15 kW. All motors IP68, water-filled and rewindable, max. 20 starts per hour.

4″ · WATER-FILLED · REWINDABLE

OSF-100 Submersible Motor

4″ rewindable motors built for dependable operation in 4″ diameter or larger water wells. Stainless steel, 50 Hz & 60 Hz.

RATING	AXIAL THRUST	SPEED	MAX. OD
1.5–7.5 kW	**4,000 N**	**2,780–2,810 rpm**	**98 mm**
2–10 HP, 3-phase	all ratings	at 50 Hz (tabulated)	NEMA 4″, studs M8

Technical specification

Mounting	**Standard 4″ NEMA flanges with studs (M8)**
Protection	**IP68**
Starts per hour	**max. 20**
Installation position	**Vertical**
Motor lead	**3 m**
Standard voltage	**380–415 V / 50 Hz · 460 V / 60 Hz**
Voltage tolerance	**+6 % / −10 % (415 V + 6 % = 440 V; 380 V − 10 % = 342 V)**
Frequency tolerance	**±2 %**
Speed	**approx. 2,850–2,880 rpm at 50 Hz**
Starting	**Direct-on-line (DOL)**
Winding	**Poly-wrapped copper winding wire**
Max. ambient	**50 °C with min. cooling flow 0.2 m/s (1.5–7.5 kW)**
Storage temperature	**−15 °C to +60 °C**
Optional	**Other voltage & frequency: 380 V / 220 V / 60 Hz; speed approx. 3,400 rpm at 60 Hz**

Product advantages

- Water-lubricated thrust and radial bearings for very low-maintenance operation
- Preloaded special diaphragm ensures pressure compensation inside the motor
- Cable material according to drinking-water regulations
- Sand slinger and SiC mechanical seal for high performance in sand
- High-efficiency electrical design for low operating cost
- All motors pre-filled and 100 % tested
- Approved tilting-type thrust bearing (1.5–7.5 kW)

CONSTRUCTION & MATERIAL OF CONSTRUCTION

OSF-100 — inside the motor

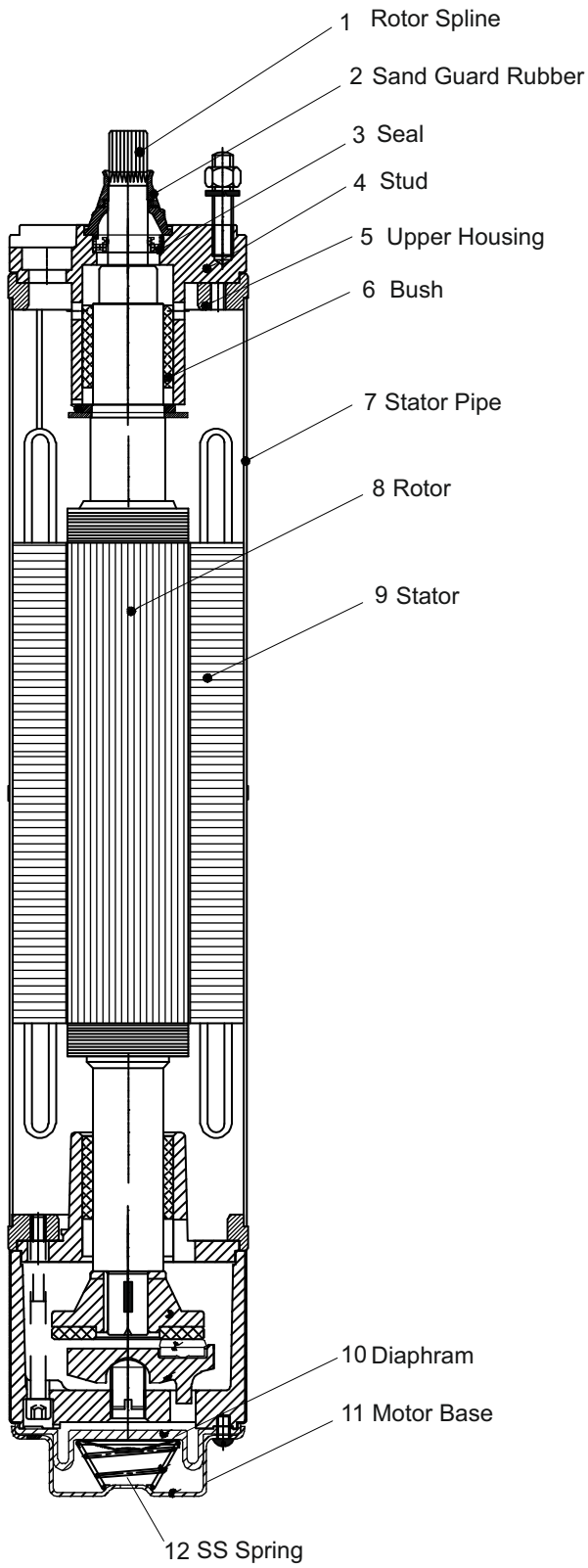

Sectional view OSF-100 — part numbers as in the material list

OSF-100 SSJK · 2–10 HP

No.	Component	Material
1	Rotor shaft (spline)	SS-410
2	Sand guard rubber	NBR
3	Seal	NBR
4	Stud	SS-304
5	Upper housing	CI / SSJK
6	Bush	Carbon / G.M.
7	Stator pipe	SS-304
8	Rotor	SS-410 + lamination
9	Stator	Lamination
10	Diaphragm	NBR
11	Motor base	CI / SSJK
12	Spring	SS

SSJK / CI: upper housing and motor base available in stainless-steel (SSJK) or cast-iron construction.

DIMENSIONS & WEIGHTS · 3-PHASE

kW	HP	Length L (mm)	Total length (mm)	Net weight (kg)
1.5	2	610	648	22
2.2	3	650	688	24
4	5.5	792	830	30
5.5	7.5	842	880	33
7.5	10	892	930	35

Total length includes the shaft extension. See outline drawing for mounting dimensions.

OUTLINE DRAWING · MOTOR LEADS

OSF-100 — mounting & electrical connection

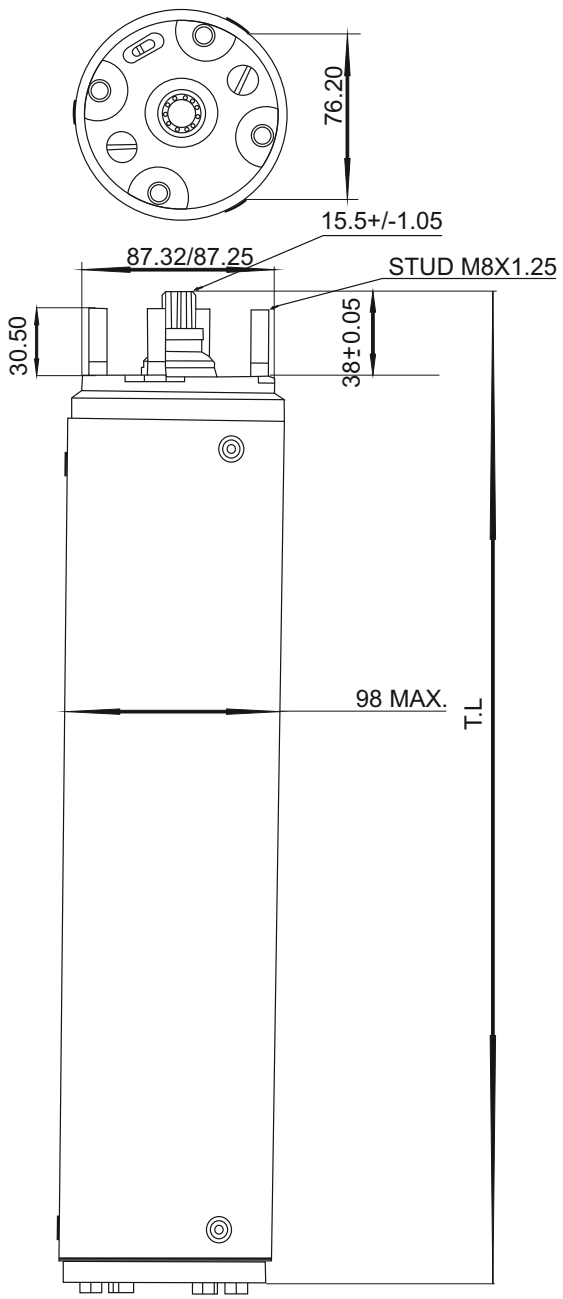

Outline drawing — standard 4″ rewindable motor (TL = total length, see table)

KEY MOUNTING DIMENSIONS

Max. diameter	98 mm
Flange	NEMA 4″, studs M8 × 1.25
Pilot	Ø 76.20
Spigot	Ø 87.32 / 87.25
Shaft extension	38 ± 0.05 mm

FLAT MOTOR LEADS · DOL

P_N (kW)	Lead θ (mm²)	B approx. (mm)	H approx. (mm)
1.5–4.0	3 × 2.5	7.3	15.3
5.5–7.5	3 × 4.0	8.5	17.8

INSULATION RESISTANCE

Insulation resistance (20 °C / 500 V)	Value
New motor without drop cable	> 200 MΩ
Used motor without drop cable	> 20 MΩ
Used motor with drop cable	> 2 MΩ

Values from the drawing; see installation section for checks before commissioning.

4″ · OSF-100

Performance data

Three-phase rewindable motors

50 HZ	60 HZ	THRUST
380–415 V	230 · 380 · 460 V	4,000 N

50 HZ · 380 V – 415 V

RATING			ELECTRICAL			EFFICIENCY H (%) AT % LOAD			
HP	kW	Thrust (N)	U_N (V)	Speed (rpm)	I_N (A)	50	75	100	T_N (Nm)
2	1.5	4,000	380	2780	3.9	68	70	**71**	5.0
			400	2790	4.0	66	68	**70**	5.0
			415	2800	4.1	64	66	**68**	4.9
3	2.2	4,000	380	2790	5.8	70	70	**72**	7.6
			400	2800	5.9	68	69	**71**	7.5
			415	2805	6.3	66	68	**70**	7.5
5.5	4	4,000	380	2780	10.8	62	67	**71**	13.4
			400	2790	10.5	61	65	**69**	13.3
			415	2810	10.0	59	64	**66**	13.3
7.5	5.5	4,000	380	2785	14.8	69	71	**71**	18.9
			400	2790	14.5	68	70	**71**	18.9
			415	2810	14.0	67	69	**71**	18.8
10	7.5	4,000	380	2780	18.0	70	72	**72**	24.6
			400	2790	18.3	67	71	**71**	25.5
			415	2810	18.8	66	68	**70**	24.4

60 HZ · 230 V – 380 V – 460 V

RATING			ELECTRICAL				EFFICIENCY H (%) AT % LOAD			
HP	kW	Thrust (N)	U_N (V)	Speed (rpm)	I_N (A)	Max. SF	50	75	100	T_N (Nm)
2	1.5	4,000	230	3350	8.0	1.15	64	66	**67**	4.1
			380	3350	4.5	1.15	64	66	**67**	4.1
			460	3350	4.2	1.15	64	66	**67**	4.1
3	2.2	4,000	230	3350	10.4	1.15	68	69	**71**	6.1
			380	3350	6.5	1.15	68	69	**71**	6.1
			460	3350	6.3	1.15	68	69	**71**	6.1
5.5	4	4,000	230	3350	21	1.15	68	69	**72**	11.2
			380	3350	13.3	1.15	68	69	**72**	11.2
			460	3350	10.1	1.15	68	69	**72**	11.2
7.5	5.5	4,000	230	3350	26.1	1.15	69	70	**73**	15.3
			380	3350	15.4	1.15	69	70	**73**	15.3
			460	3350	12.9	1.15	69	70	**73**	15.3
10	7.5	4,000	230	3350	35.9	1.15	69	70	**73**	20.4
			380	3350	20.8	1.15	69	70	**73**	20.4
			460	3350	17.2	1.15	69	70	**73**	20.4

P_N rated output · U_N rated voltage · n_N rated speed · I_N rated current · I_A starting current · T_N rated torque · T_A starting torque · SF service factor. Performance is typical, not guaranteed.

6″ · WATER-FILLED · REWINDABLE

OSL-150 & OSF-15 Motors

6″ rewindable motors built for dependable operat diameter or larger water wells. Stainless steel, 50 Hz.

RATING	AXIAL THRUST	SPEED	MAX. OD
4–45 kW	**15,500 N**	**2,850–2,910 rpm**	**144.5 mm**
5.5–60 HP, 3-phase	27,500 N from 15 kW	at 50 Hz (tabulated)	NEMA 6″, studs M12

Technical specification

Mounting	**Standard 6″ NEMA flanges with studs (M12)**
Protection	**IP68**
Starts per hour	**max. 20**
Installation position	**Vertical**
Motor lead	**3 m**
Standard voltage	**380–415 V / 50 Hz · 460 V / 60 Hz**
Voltage tolerance	**+6 % / −10 % (415 V + 6 % = 440 V; 380 V − 10 % = 342 V)**
Frequency tolerance	**±2 %**
Speed	**approx. 2,850–2,900 rpm at 50 Hz · approx. 3,450 rpm at 60 Hz**
Starting	**Direct-on-line (DOL) / star-delta**
Winding	**Poly-wrapped copper winding wire**
Storage temperature	**−15 °C to +60 °C**
Thrust bearing	**Tilting type (4–13 kW); 6-segment tilting type for high thrust (15–45 kW)**
Filling volume	**approx. 5 litres**
Optional	**Other voltage & frequency: 380 V / 220 V / 60 Hz**

Product advantages

- Water-lubricated thrust and radial bearings for very low-maintenance operation
- Preloaded special diaphragm ensures pressure compensation inside the motor
- Cable material according to drinking-water regulations
- Sand slinger and SiC mechanical seal for high performance in sand
- High-efficiency electrical design for low operating cost
- All motors pre-filled and 100 % tested

OSL-150 vs OSF-150

Series	OSL-150	OSF-150
Construction	SSJK or CI (cast-iron) version	SS-304 or CI (cast-iron) version
Max. ambient	50 °C at min. cooling flow 0.2 m/s (4–45 kW)	30 °C [1] at min. co flow 0.2 m/s (4–13 kW) /

OUTLINE DRAWING · DIMENSIONS & WEIGHTS

OSL-150 SSJK & OSL-150 CI

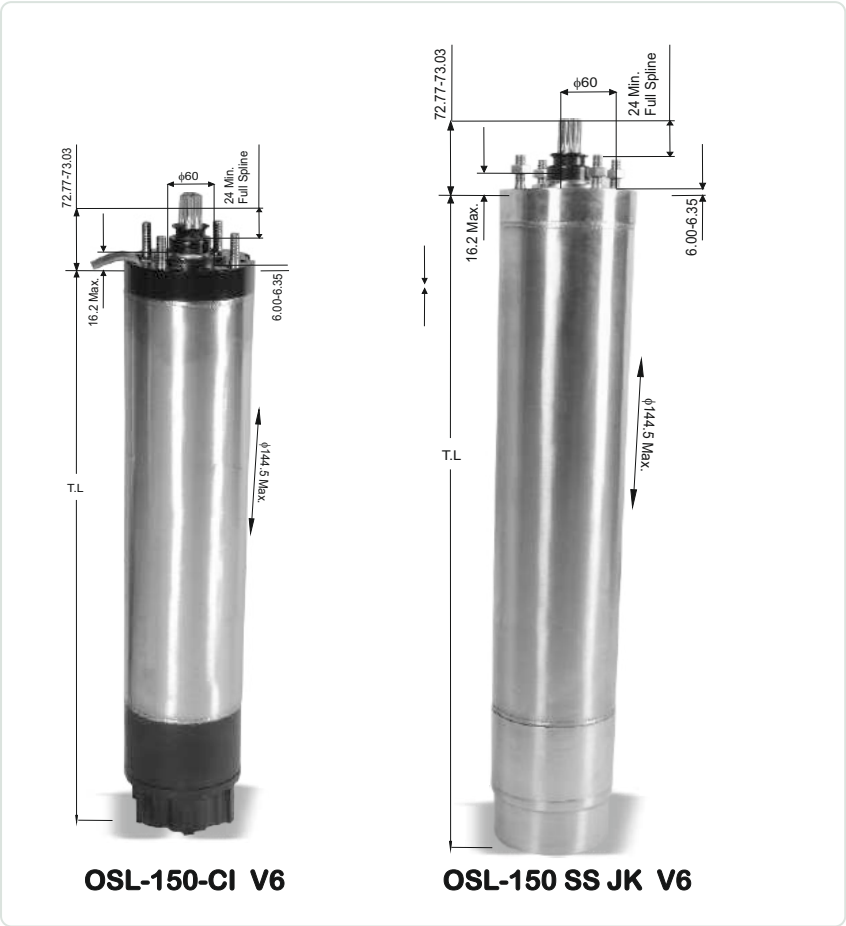

Outline drawings — OSL-150 CI V6 (left) · OSL-150 SSJK V6 (right)

KEY DIMENSIONS

Max. diameter	Ø 144.5 mm
Pilot	72.77–73.03 mm
Shaft	full spline, 24 min.
Stud projection	6.00–6.35 mm

DIMENSIONS & WEIGHTS · 50 HZ

kW	HP	Length L (mm)	Total length with cap (mm)	Weight w/o packing (kg)	Weight with packing (kg)
4	5.5	713	786	41.5	46.4
5.5	7.5	753	826	49.3	54.2
7.5	10	783	856	50.9	55.9
9.3	12.5	823	896	55.4	60.4
11	15	833	906	55.8	60.9
13	17.5	873	946	60.3	65.7
15	20	913	986	66.6	72.0
18.5	25	963	1036	72.7	78.5
22	30	1033	1106	79.3	85.4
26	35	1033	1106	79.4	85.5
30	40	1133	1206	90.8	97.1
37	50	1183	1256	95.2	102
45	60	1183	1256	96.2	103

CUT DRAWING · DIMENSIONS & WEIGHTS

OSF-150 SS-304 & OSF-150 CI

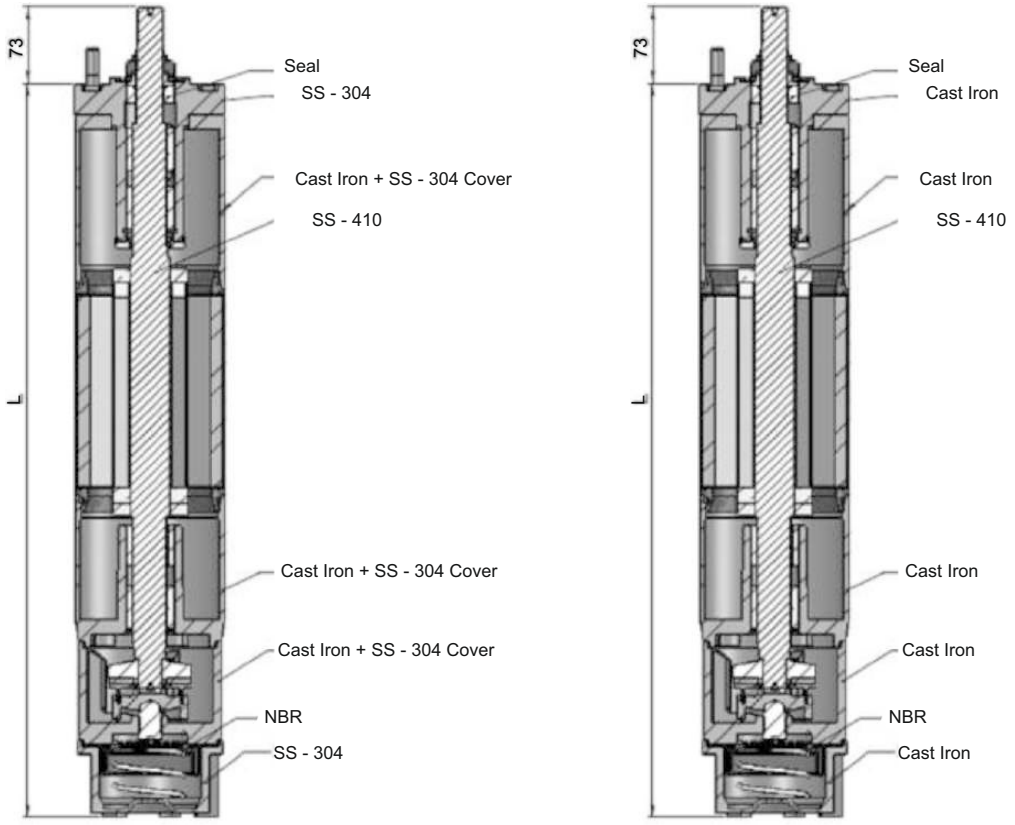

Cut drawings with materials — OSF-150 SS-304 (left) · OSF-150 CI (right)

DIMENSIONS & WEIGHTS

kW	HP	Length L (mm)	Total length TL with cap (mm)	Motor weight w/o packing (kg)	Gross weight with packing (kg)
4	5.5	680	753	41.5	46.4
5.5	7.5	720	793	49.3	54.2
7.5	10	750	823	50.9	55.9
9.3	12.5	790	863	55.4	60.4
11	15	800	873	55.8	60.9
13	17.5	840	913	60.3	65.7
15	20	880	953	66.6	72.0
18.5	25	930	1003	72.7	78.5
22	30	1000	1073	79.3	85.4
26	35	1000	1073	79.4	85.5
30	40	1100	1173	90.8	97.1
37	50	1150	1223	95.2	102
45	60	1150	1223	96.2	103

30 kW total length corrected to 1,173 mm (source: 1,073 mm; TL = L + 73 mm on every other row). Weights are printed identical to OSL-150 in the source.

OUTLINE · COUPLINGS · INSULATION

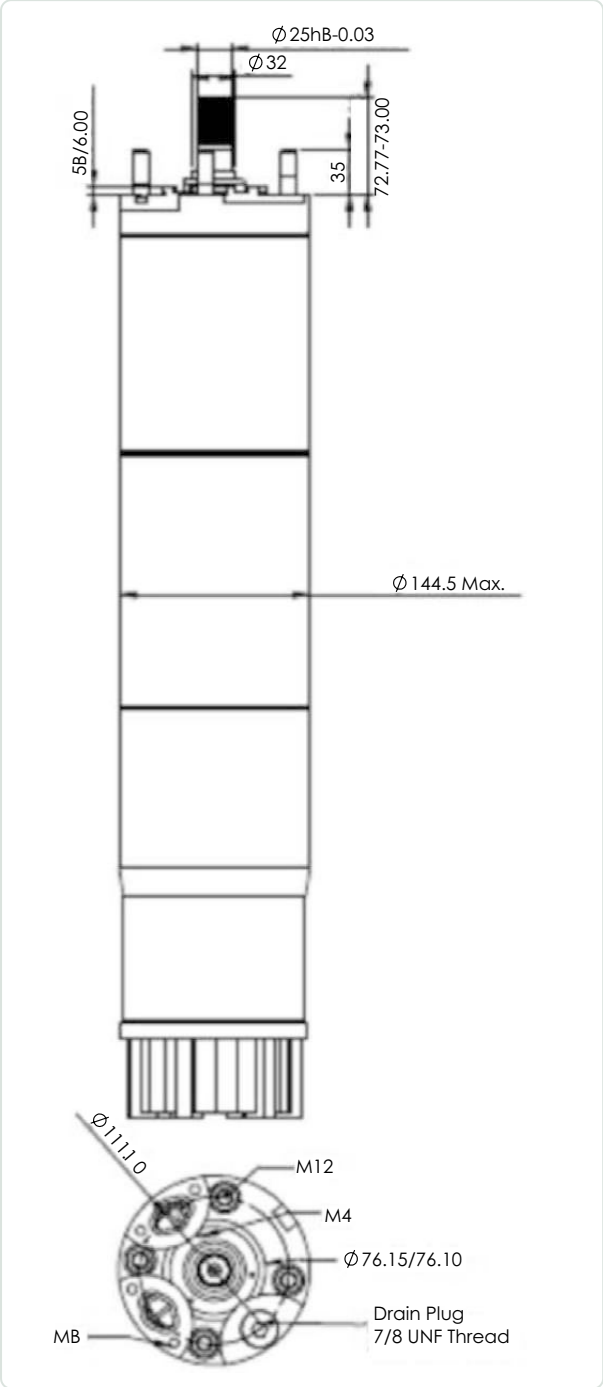

OSF-150 standard motor outline

6″ motor outline & couplings

6″ REWINDABLE MOTOR COUPLINGS · 400 V / 50 HZ

Coupling material	Dim. A max./min. (mm)	Dim. B max./min. (mm)	Dim. C max./min. (mm)
AISI 304	20.025 / 20.013	22.76 / 22.60	6.05 / 6.00
AISI 304	22.025 / 22.013	25.53 / 25.32	8.03 / 7.98
AISI 304	25.025 / 25.013	28.70 / 28.30	8.03 / 7.98

INSULATION RESISTANCE

Insulation resistance (20 °C / 500 V DC)	Value
New motor without drop cable	> 200 MΩ
Used motor without drop cable	> 20 MΩ
New motor with drop cable	> 2 MΩ
Used motor with drop cable	0.5–2 MΩ

OUTLINE — KEY DIMENSIONS

Max. diameter	Ø 144.5 mm
Shaft	Ø 25 h8 −0.03 · spline Ø 32
Pilot	72.77–73.00 mm
Mounting	studs M12 · M4 · M8
Drain plug	7/8 UNF thread
Base	Ø 76.15 / 76.10

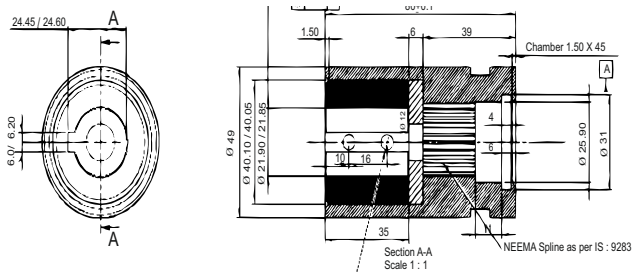

EXPLODED VIEW & MATERIAL OF CONSTRUCTION

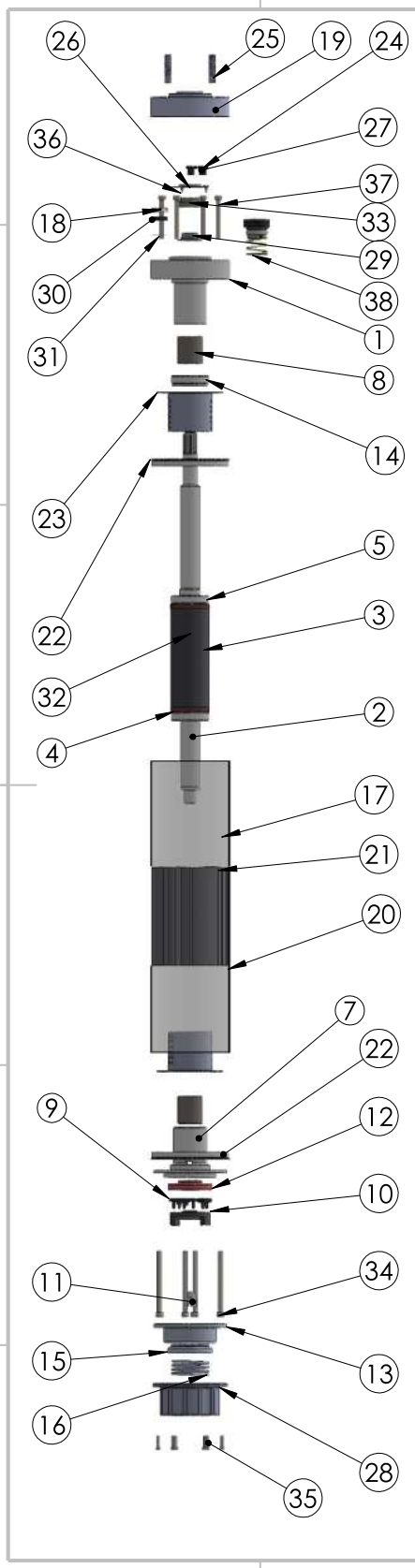

SR.NO	PART DESCRIPTION	QTY	MATERIAL
1	UPPER HOUSING	01	FG-260
2	ROTOR SHAFT	01	SS410
3	ROTOR ASSY	-	
4	COPPER RING	.	COPPER
5	BALANCE RING	02	MS
6	TB HOUSING	01	FG-260
7	LOWER HOUSING	01	FG-260
8	CARBON BUSH	02	CARBON
9	THRUST BEARING SEGMENT	03	CI
10	TB PLATE	01	FG-260
11	ADJUSTING SCREW	01	SS-431
12	REVERSE PLATE	01	FG-260
13	DIAPHGRAM	01	NBR
14	TAFLON WASHER	01	TAFLON
15	PLASTIC CAP	01	NYLON
16	SPRING	01	SS-304
17	STATOR PIPE	01	SS-304
18	LOCK NUT	01	BRASS
19	UPPER HOUSING COVER	01	SS-304
20	STAMPING ASSEMBLY	-	CRC
21	STATOR STAMPING	02	SS-304
22	END RING		SS-304
23	WINDING CAP	02	NYLON
24	DRAIN PLUG	02	BRASS
25	STUD	04	SS-304
26	SEAL COVER	01	SS-304
27	ORING	04	NBR
28	MOTOR BASE	1	SS-304
29	DUST COVER	1	SS-304
30	GROVEMATE	1	NBR
31	GROVEMATE WASHER	1	SS-304
32	ROTOR STAMPLING	.	.
	HARDWARE		
33	OIL SEAL	01	NBR+304
34	ALLEN BOLT	04	SS-304
35	ALLEN BOLT	06	SS-304
36	M 6 SCREW	04	SS-304
37	ALLEN BOLT	04	SS-304
38	MECH.SEAL	01	.

Exploded view, spare parts and materials — 6″ OSL-150 (original drawing)

EXPLODED VIEW & MATERIAL OF CONSTRUCTION

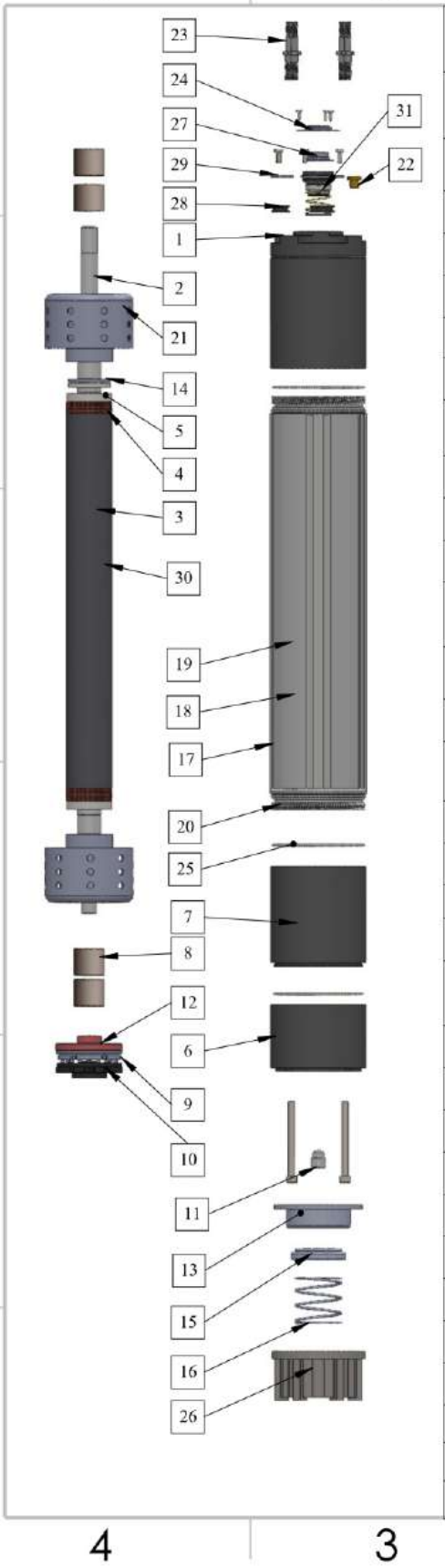

OSF-150(SSJK)

SR.NO	PART DESCRIPTION	QTY	MATERIAL
1	UPPER HOUSING	01	SS 304+CI
2	ROTOR SHAFT	01	SS-410
3	ROTOR ASSY	-	
4	COPPER RING	.	COPPER
5	BALANCE RING	02	MS
6	TB HOUSING	01	SS-304+CI
7	LOWER HOUSING	01	CI
8	CARBON BUSH	04	CARBON
9	THRUST BEARING SEGMENT	03	CI
10	TB PLATE	01	CI
11	ADJUSTING SCREW	01	SS-304
12	REVERSE PLATE	01	CI
13	DIAPHGRAM	01	NBR
14	TAFLON WASHER	01	TAFLON
15	PLASTIC CAP	01	NYLON
16	SPRING	01	SS-304
17	STATOR PIPE	01	SS-304
18	STAMPING ASSEMBLY	-	CRC
19	STATOR STAMPING	02	SS-304
20	END RING		SS-304
21	WINDING CAP	02	NYLON
22	DRAIN PLUG	02	BRASS
23	STUD	04	SS-304
24	SEAL COVER	01	SS-304
25	ORING	02	NBR
26	MOTOR BASE	01	SS-304+CI
27	DUST COVER	01	SS-304
28	GROMMATE	01	NBR
29	CABLE CLAMP	01	SS-304
30	ROTOR STAMPLING	.	CRC
31	MECH SEAL	01	STD

Exploded view, spare parts and materials — 6″ OSF-150 (SSJK) (original drawing)

6″ OSL-150 · OSF-150

— performance data 50 Hz · 380 / 400 / 415 V

RATING		ELECTRICAL				EFFICIENCY H (%) AT % LOAD			POWER FACTOR COS Φ AT % LOAD			TORQUE	
P_N (kW)	Thrust (N)	U_N (V)	n_N (rpm)	I_N (A)	I_A (A)	50	75	100	50	75	100	T_N (Nm)	T_A (Nm)
4	15,500	380	2910	10.4	48	71	75	**76**	0.59	0.71	0.78	13.1	15.5
		400	2930	10.6	51	68	73	**76**	0.53	0.65	0.73	13.1	17.3
		415	2930	10.9	53	65	72	**76**	0.50	0.61	0.69	13	18.8
5.5	15,000	380	2860	13.7	48	74	76	**75**	0.67	0.78	0.83	18.3	15.5
		400	2890	13.3	51	72	76	**76**	0.62	0.74	0.81	18.2	17.3
		415	2890	13.4	53	71	75	**75**	0.59	0.71	0.78	18.1	18.8
7.5	15,500	380	2860	18.3	59	77	78	**76**	0.70	0.80	0.84	25	19.2
		400	2880	17.7	63	75	78	**77**	0.65	0.76	0.82	24.8	21.5
		415	2890	17.7	65	73	77	**77**	0.61	0.73	0.80	24.7	23.4
9.3	15,500	380	2850	22	74	79	80	**78**	0.71	0.80	0.84	31.1	25.9
		400	2870	21.4	78	78	79	**78**	0.64	0.76	0.82	31	29
		415	2880	21.2	81	76	79	**78**	0.60	0.72	0.80	30.9	31.4
11	15,500	380	2860	25.8	93	78	80	**78**	0.71	0.80	0.85	36.7	31.5
		400	2880	25.2	98	77	80	**79**	0.65	0.76	0.83	36.4	35.3
		415	2890	25.1	102	75	78	**79**	0.61	0.73	0.80	36.3	38.2
13	15,500	380	2880	30.1	118	80	81	**80**	0.68	0.79	0.84	43.1	45
		400	2900	29.6	125	78	80	**80**	0.61	0.74	0.81	42.8	50.3
		415	2900	29.7	130	76	79	**80**	0.57	0.70	0.78	42.7	54.6
15	27,500	380	2880	33.9	140	81	82	**81**	0.71	0.81	0.85	49.7	53.9
		400	2890	33.1	148	79	81	**81**	0.65	0.77	0.83	49.4	60.4
		415	2900	33	154	77	80	**81**	0.60	0.73	0.81	49.3	65.5
18.5	27,500	380	2860	42.3	172	81	82	**81**	0.68	0.78	0.84	61.7	75.2
		400	2880	42	182	78	81	**81**	0.61	0.74	0.80	61.2	84.3
		415	2890	42.5	189	76	79	**80**	0.57	0.70	0.77	61.1	91.3
22	27,500	380	2880	49.1	218	82	84	**83**	0.68	0.78	0.84	72.6	91.2
		400	2900	49	231	80	82	**82**	0.61	0.73	0.80	72.5	102.2
		415	2910	49.6	240	77	81	**82**	0.58	0.69	0.77	72.2	110.7
26	27,500	380	2880	57.5	268	83	84	**83**	0.68	0.79	0.86	86	120.4
		400	2900	56.7	284	81	83	**83**	0.61	0.74	0.83	85.6	134.7
		415	2910	57.3	296	78	82	**82**	0.56	0.69	0.80	85.3	146.1
30	27,500	380	2900	66.4	328	82	84	**83**	0.67	0.78	0.84	98.8	135
		400	2910	66.4	347	80	83	**83**	0.60	0.73	0.80	98.4	151
		415	2910	67.5	361	77	81	**82**	0.55	0.69	0.77	98.2	163
37	27,500	380	2890	82	409	83	84	**83**	0.67	0.78	0.85	122.1	192.8
		400	2900	81.9	433	80	83	**83**	0.60	0.72	0.80	121.6	215.8
		415	2910	83.9	450	77	81	**82**	0.55	0.68	0.76	121.3	234
45	27,500	380	2895	90.9	490	85.7	86.5	**85.2**	0.80	0.85	0.88	149	218
		400	2910	90	520	85.3	86.5	**86**	0.75	0.82	0.86	148	240
		415	2910	88	542	84.4	86.1	**85.8**	0.69	0.80	0.85	147	262

P_N rated output · U_N rated voltage · n_N rated speed · I_N rated current · I_A starting current · T_N rated torque · T_A starting torque · SF service factor. Performance is typical, not guaranteed. Efficiency converted from decimal fractions (0.76) to % for consistency. **Shaded rows (45 kW)**: values identical to the 8″ OSF-300 45 kW row — please confirm.

6″ OSL-150 · OSF-150

— performance data 60 Hz · 230 / 380 / 460 V

RATING			ELECTRICAL				EFFICIENCY H (%) AT % LOAD			POWER FACTOR COS Φ AT % LOAD			TORQUE	
P_N (kW)	P_{max} (kW)	Thrust (N)	U_N (V)	n_{max} (rpm)	I_{max} (A)	I_A (A)	50	75	100	50	75	100	T_{max} (Nm)	T_A (Nm)
4	4.6	15,500	230	3520	21	106	70	75	**77**	0.52	0.64	0.73	12.5	18.6
			380	3530	13.3	61	66	72	**77**	0.51	0.63	0.71	12.4	15
			460	3520	10.1	51	70	76	**78**	0.56	0.67	0.75	12.5	15.3
5.5	6.3	15,500	230	3490	26.1	106	74	78	**78**	0.61	0.73	0.80	17.3	15.9
			380	3480	15.4	61	76	78	**78**	0.64	0.75	0.81	17.3	15
			460	3480	12.9	51	74	77	**77**	0.65	0.76	0.82	17.3	15.1
7.5	8.6	15,500	230	3490	35.9	146	75	79	**79**	0.58	0.71	0.78	23.6	22.4
			380	3480	20.8	81	76	79	**79**	0.64	0.75	0.81	23.6	20.2
			460	3470	17.2	64	75	78	**78**	0.67	0.77	0.82	23.7	19.4
9.3	10.7	15,500	230	3490	44.4	183	75	79	**79**	0.59	0.71	0.78	29.3	28.9
			380	3470	25.6	100	77	80	**80**	0.64	0.75	0.81	29.4	25.9
			460	3460	20.8	78	78	80	**80**	0.67	0.78	0.82	29.4	24.4
11	12.7	15,500	230	3490	51.2	220	77	80	**81**	0.60	0.72	0.79	34.6	35.6
			380	3490	30.3	129	77	81	**81**	0.62	0.74	0.80	34.5	34.3
			460	3480	25	98	78	81	**80**	0.68	0.77	0.83	34.7	31.5
13	15	15,500	230	3500	62.4	288	76	80	**81**	0.55	0.68	0.76	40.7	50.5
			380	3500	36.3	164	77	81	**82**	0.59	0.71	0.78	40.7	47.2
			460	3490	29	125	78	81	**81**	0.65	0.76	0.82	40.9	43.3
15	17.3	27,500	230	3500	65.9	325	80	83	**83**	0.63	0.74	0.81	47	59.5
			380	3490	39.1	188	81	83	**83**	0.66	0.77	0.82	47.2	56.5
			460	3490	32.1	151	80	83	**83**	0.68	0.78	0.84	47.1	55.6
18.5	21.3	27,500	230	3490	85.4	402	77	81	**82**	0.59	0.71	0.78	58.1	81.8
			380	3490	52.5	249	76	80	**81**	0.58	0.70	0.77	58.1	83.6
			460	3480	40.6	184	80	82	**82**	0.65	0.76	0.81	58.4	74.5
22	25.3	27,500	230	3510	100.2	520	82	84	**84**	0.65	0.74	0.77	68.8	96.6
			380	3510	59.9	309	82	84	**84**	0.67	0.75	0.78	68.8	94.9
			460	3500	47.1	232	83	84	**84**	0.72	0.79	0.82	69.1	85.8
26	29.9	27,500	230	3510	118.3	657	83	85	**85**	0.63	0.72	0.76	81.3	135
			380	3500	67.5	360	83	85	**85**	0.62	0.74	0.81	81.6	121.4
			460	3500	55.7	287	83	85	**85**	0.64	0.76	0.84	81.6	117.2
30	34.5	27,500	230	3510	135.7	758	78	82	**83**	0.58	0.71	0.78	93.8	139.6
			380	3510	79.6	436	79	83	**84**	0.62	0.74	0.81	93.9	132.9
			460	3500	64.4	346	81	84	**84**	0.64	0.75	0.82	94	126.4
37	42.6	27,500	230	3510	169.9	937	77	81	**82**	0.59	0.71	0.78	115.8	193.6
			380	3510	102.8	567	77	81	**82**	0.59	0.71	0.78	115.8	193.6
			460	3500	79.1	430	82	84	**85**	0.63	0.75	0.81	116	177.8
45	51.7	27,500	230	3500	196	980	77	81	**82**	0.59	0.71	0.78	115.8	193
			380	3500	110	575	77	81	**82**	0.59	0.71	0.78	115.8	193
			460	3500	88	450	82	84	**85**	0.63	0.75	0.81	116	177.8

P_{max}, n_{max}, I_{max}, T_{max} at service-factor load. P_N rated output · U_N rated voltage · n_N rated speed · I_N rated current · I_A starting current · T_N rated torque · T_A starting torque · SF service factor. Performance is typical, not guaranteed. 13 kW middle voltage corrected 360 → 380 V. **Shaded rows (37 & 45 kW)**: 45 kW efficiency, power factor and torque repeat the 37 kW values, and 37 kW 230 V / 380 V rows are identical — please confirm.

DE-RATING CURVES

De-rating of 6″ rewindable motors

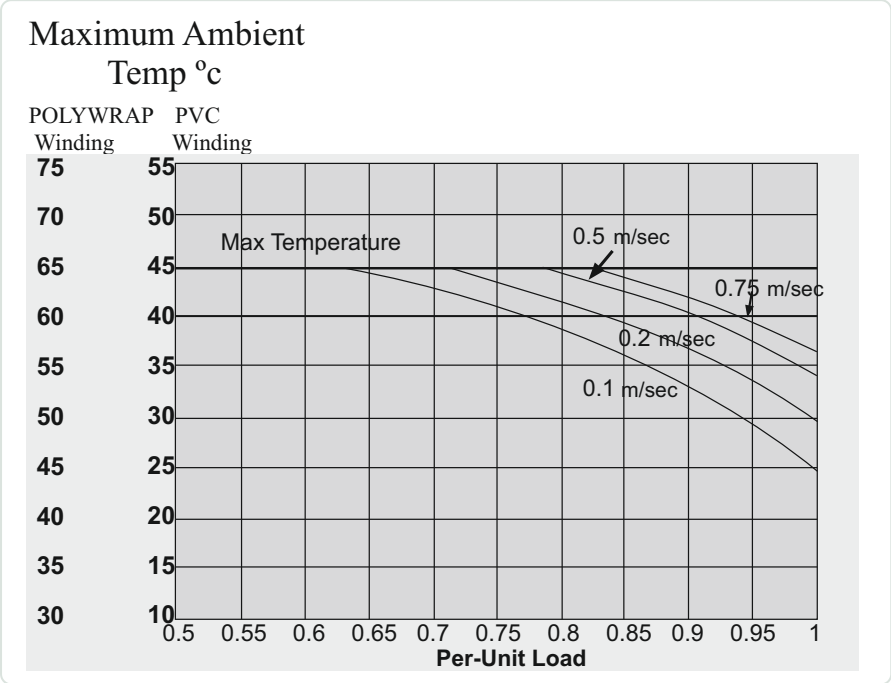

4–13 kW

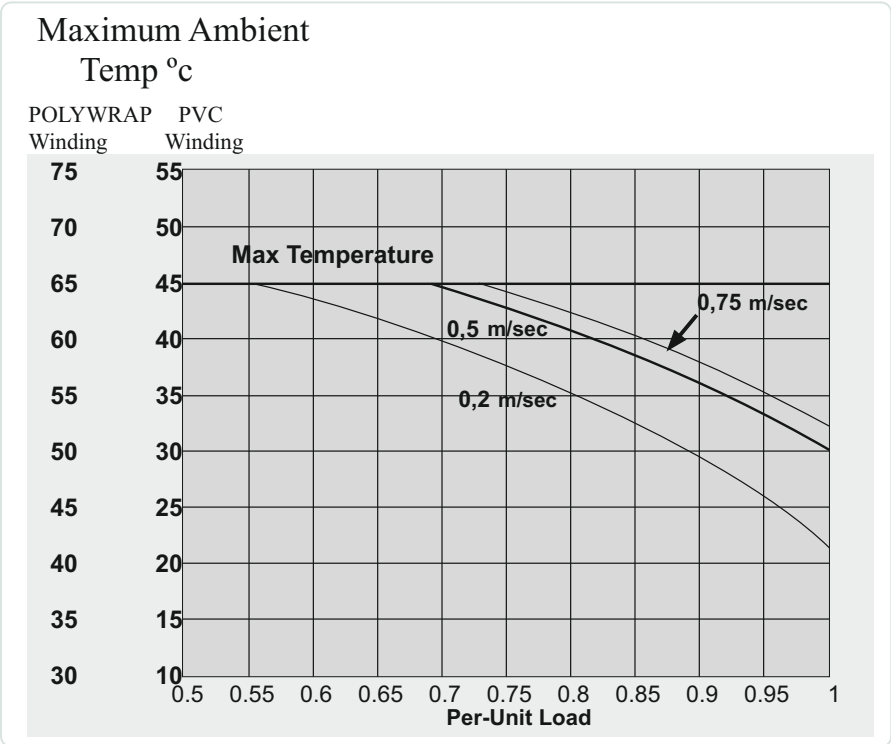

15–45 kW

HOW TO READ THE CURVES

Maximum permissible ambient (water) temperature versus per-unit load, for poly-wrapped (left scale) and PVC (right scale) winding wire, at the cooling-flow velocities shown along the motor (0.1–0.75 m/s).

Where the required flow velocity cannot be reached, fit a cooling tube (see Motor operation).

8″ · WATER-FILLED · REWINDABLE

OSF-200 Submersible Motor

Stainless-steel & cast-iron 8″ rewindable motors for deep, high-flow borewells. Three-phase 30–93 kW, 380–415 V / 50 Hz.

RATING	AXIAL THRUST	SPEED	MAX. OD
30–93 kW	**45,000 N**	**2,885–2,930 rpm**	**Ø 190 mm**
40–125 HP, 3-phase	all ratings	at 50 Hz (tabulated)	flange Ø 192.5

Technical specifications

Design	**8″ Oswal water-lubricated rewindable motors**
Coupling dimensions	**As per NEMA standards**
Winding wire	**Poly-wrapped; PVC winding on specific demand**
Degree of protection	**IP68**
Max. water temperature	**35 °C**
Starts per hour	**max. 20**
Allowable voltage variation	**+6 % / −15 %**
Motor shaft	**Stainless steel**
Stator shell	**Stainless steel**
Max. immersion depth	**350 m**
Mounting	**Vertical / horizontal**
Motor cable	**5 m, 3-core with separate earth cable; 4-core as per requirement**
Cooling flow	**0.2–0.5 m/s**
Coolant	**Clear water**

Versions

- Three-phase 30 kW to 93 kW / 380–415 V / 50 Hz
- Motors with other voltage and frequency ratings are available on specific demand

CUT DRAWING · MATERIAL · WEIGHTS

OSF-200 — construction

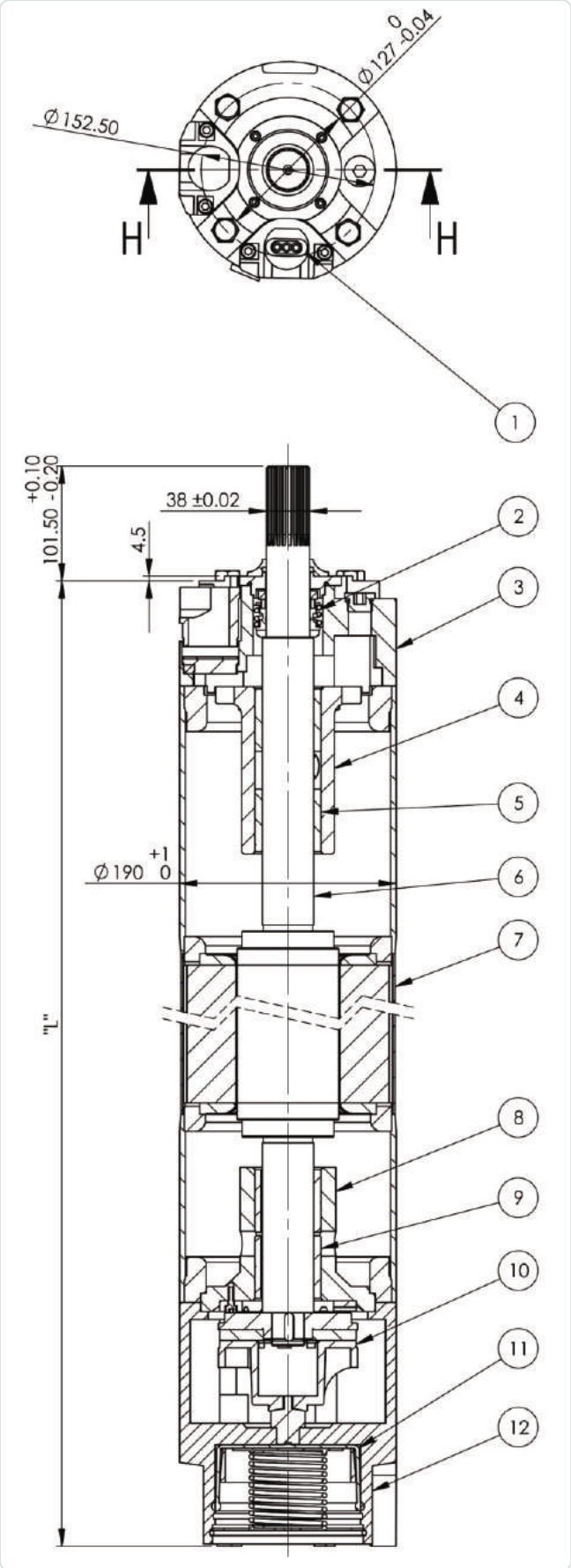

Cut drawing OSF-200 — part numbers as in the material list

OSF-200 · 30–93 kW

No.	Component	Material
1	Cable 3-core / 4-core	EPR
2	Mechanical seal	NBR / SS / carbon
3	Adaptor	CI (FG-200)
4	Upper housing	CI (FG-200)
5	Bearing bush	Carbon
6	Rotor shaft	SS 420
7	Motor pipe	Stainless steel
8	Lower housing	CI (FG-200)
9	Bearing bush	Carbon
10	Thrust bearing set	Carbon / SS 410
11	Pressure cup	NBR
12	Motor base	CI (FG-200)
13	All hardware	SS 316 / 304

MOTOR WEIGHTS

kW	HP	Motor weight (kg)	Weight incl. packing (kg)
30	40	145	165
37	50	165	195
45	60	195	228
52	70	195	228
55	75	223	260
60	80	223	260
75	100	267	315
93	125	300	354

FLAT CABLE LEADS · 415 V, 50 HZ

P_N (kW)	Single cable DOL	Double cable YΔ	Length (m)
30–37	1 × 3 × 16 mm²	2 × 3 × 10 mm²	5
45–75	1 × 3 × 25 mm²	2 × 3 × 16 mm²	5
93	1 × 3 × 35 mm²	2 × 3 × 25 mm²	5

Separate earth cable on request.

8″ · OSF-200

Performance data

Standard rewindable motors · 50 Hz

VOLTAGE 380 · 400 · 415 V | THRUST 45,000 N | RATING 30–93 kW

RATING			ELECTRICAL				EFFICIENCY H (%) AT % LOAD			POWER FACTOR COS Φ AT % LOAD			TORQUE	
HP	P_N (kW)	Thrust (N)	U_N (V)	n_N (rpm)	I_N (A)	I_A (A)	50	75	100	50	75	100	T_N (Nm)	T_A (Nm)
40	30	45,000	380	2885	63.1	301	83.4	84.4	**83.2**	0.88	0.88	0.89	99.1	126
			400	2900	60	317	83.5	85	**84.4**	0.80	0.85	0.89	99	141
			415	2910	58	331	83.4	85.1	**84.8**	0.76	0.88	0.89	98.1	150
50	37	45,000	380	2890	79.1	377	84.5	85.2	**84**	0.81	0.85	0.87	122	155
			400	2910	76	400	83.8	85.2	**84.5**	0.75	0.82	0.86	122	176
			415	2910	75.1	411	82.5	84.4	**84.3**	0.70	0.80	0.85	120	189
60	45	45,000	380	2895	92.9	490	85.7	86.5	**85.2**	0.80	0.85	0.88	149	218
			400	2910	90	520	85.3	86.5	**86**	0.75	0.82	0.86	148	240
			415	2910	88	542	84.4	86.1	**85.8**	0.69	0.80	0.85	147	262
70	52	45,000	380	2903	106.5	608	86.4	86.8	**85.4**	0.82	0.86	0.87	181	284
			400	2912	103.5	632	86.2	87.2	**86.1**	0.75	0.84	0.85	180	317
			415	2918	101.5	624	85.8	87.1	**86.8**	0.72	0.81	0.84	180	346
75	55	45,000	380	2910	115	625	86.4	86.8	**85.7**	0.78	0.84	0.88	182	302
			400	2915	110	660	85.8	87	**86.5**	0.72	0.82	0.85	180	341
			415	2920	109	687	84.7	86.5	**86.2**	0.67	0.78	0.85	180	361
80	60	45,000	380	2910	121	698	87.3	87.5	**86.6**	0.82	0.86	0.88	206	320
			400	2920	116	724	86.8	87.6	**87.1**	0.78	0.83	0.86	205	356
			415	2925	115	767	86.2	87.5	**87**	0.74	0.81	0.89	205	387
100	75	45,000	380	2920	154	892	86.7	87.1	**85.9**	0.79	0.86	0.84	247	419
			400	2910	148	942	86.2	87.3	**86.7**	0.74	0.83	0.89	246	472
			415	2920	147	982	85.4	86.9	**86.6**	0.69	0.79	0.87	245	510
125	93	45,000	380	2915	186	1185	86.9	88	**87.2**	0.76	0.83	0.87	304	555
			400	2925	182	1275	87	88.2	**87.4**	0.70	0.79	0.84	302	625
			415	2930	183	1307	86.1	87.6	**87.2**	0.63	0.74	0.81	301	674

P_N rated output · U_N rated voltage · n_N rated speed · I_N rated current · I_A starting current · T_N rated torque · T_A starting torque · SF service factor. Performance is typical, not guaranteed. Transcribed from the scanned source page; 30 kW / 415 V power factor at 50 % load printed “76” → 0.76.

EXPLODED VIEW & SPARE PARTS

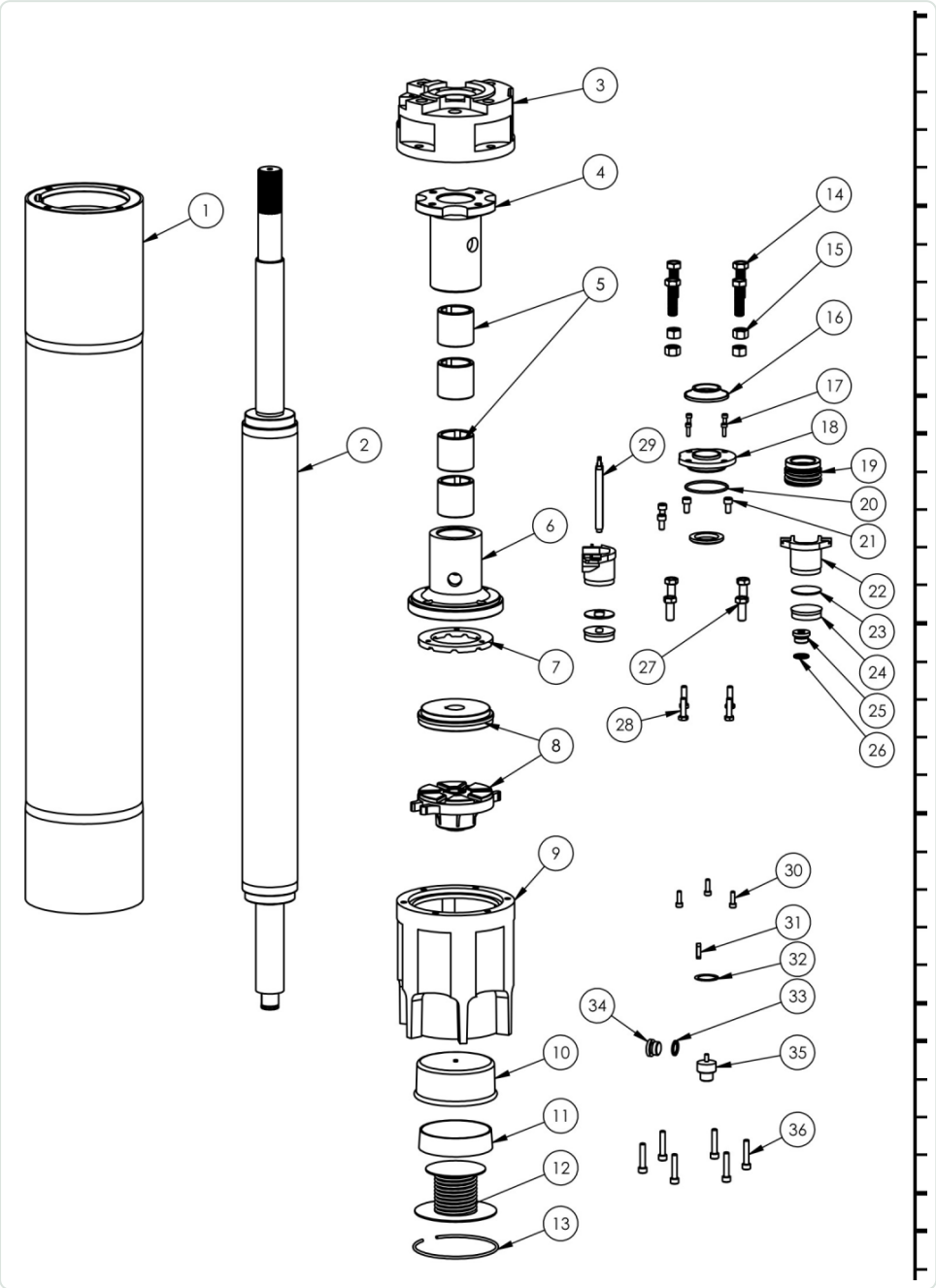

Exploded view OSF-200 (original drawing)

OSF-200 spare parts

No.	Part name
1	Stator assy.
2	Rotor assy.
3	Adaptor
4	Upper housing
5	Bearing bush
6	Lower housing
7	Counter bearing
8	Thrust bearing
9	Motor base
10	Pressure cup
11	Pressure cup supporter
12	Spring
13	Circlip
14	Hex. bolt
15	Hex. nut
16	Sand guard
17	Allen bolt
18	Seal guard
19	Mechanical seal
20	O-ring
21	Allen bolt
22	Cable plunger
23	Grommet washer
24	Grommet
25	Drain plug
26	Drain plug O-ring
27	Hex. bolt
28	Hex. bolt
29	Cable
30	Allen bolt
31	Rotor key
32	Circlip
33	O-ring
34	Drain plug
35	Rocker support
36	Allen bolt

OUTLINE DRAWING

OSF-200 — outline drawing of V8 motor

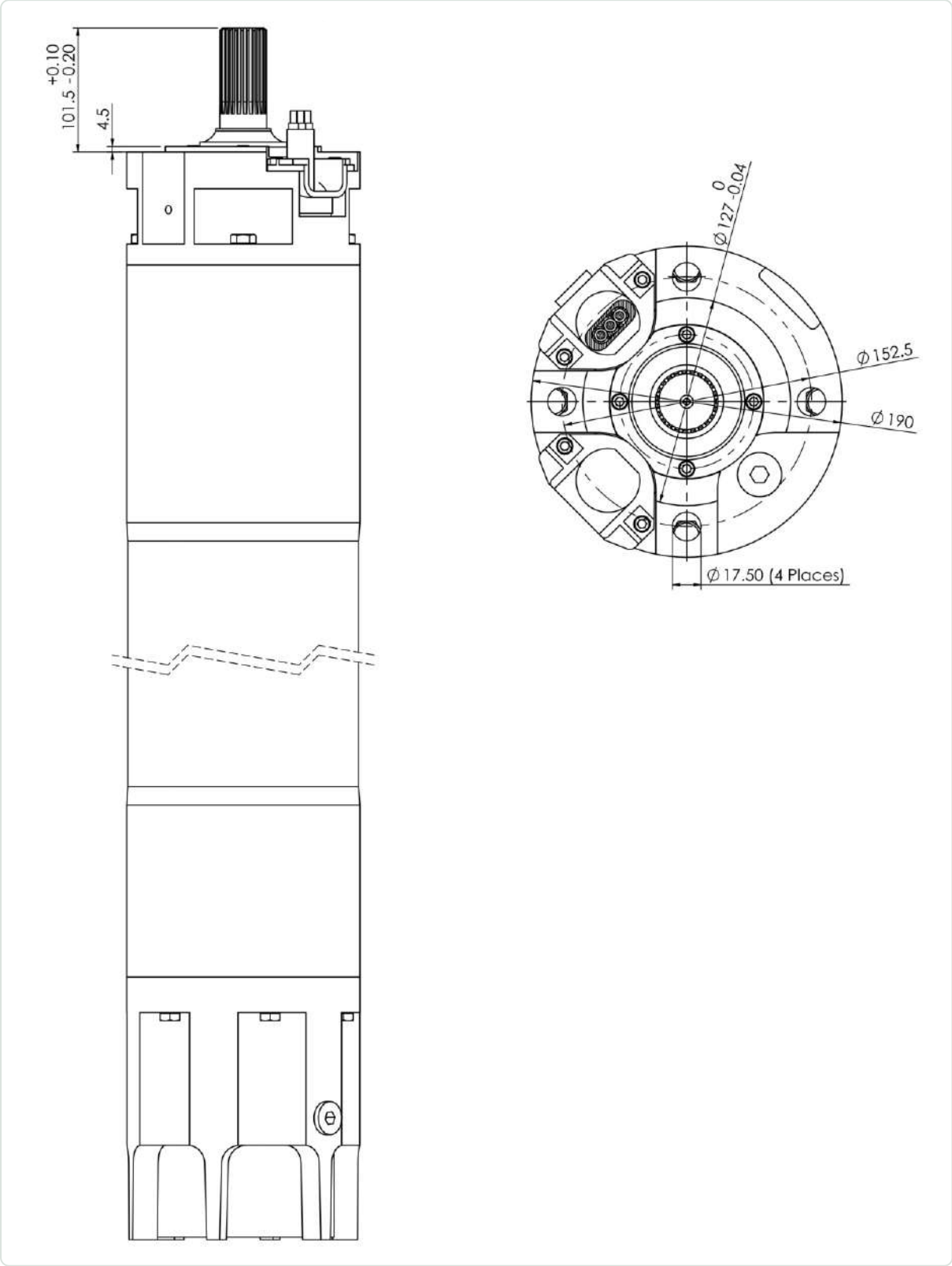

Outline drawing of V8 motor (original drawing)

ASSEMBLY & OPERATING INSTRUCTIONS

General safety instructions

The following safety measures must be observed before putting any Oswal submersible motor into use. They apply to all series in this catalogue (4″, 6″ and 8″).

- Do not carry out any work on the motor other than that described in these instructions.
- Only use the motor under water — the motor and the short motor cable must be fully submerged.
- Do not make any changes or conversions to the motor or its electrical connections.
- Never open the motor.
- Never use the motor in combination with damaged pump units or parts.
- Only work on the motor when it is switched off. No work or checks require the motor to be running.
- Switch off the power supply to the motor before carrying out any work on it.
- Make sure that nobody can switch on the voltage unexpectedly while work is being carried out on the motor.
- Never work on electrical systems during a thunderstorm.
- Immediately after finishing work, make sure that all protective and safety devices have been refitted and are operational.
- Before switching on the motor, make sure that all electrical connections and safety devices have been checked and that all fuses and safeties have been set correctly.
- Make sure that no danger zones are freely accessible (e.g. rotating parts, suction locations, pressure outlets, electrical connections). Observe the pump manufacturer's commissioning instructions.
- Motor or pump units that have been used in contaminated media must be marked as such before handing them over to a third party (e.g. when submitting them for repair). Pay attention to possible residues in "dead spaces" (diaphragm cover).

Storage · transport · unpacking · disposal

STORAGE

Store the motor in its original packaging until installation. If stored upright, make sure it cannot topple over (shaft always pointing up). Do not store in direct sunlight or near other heat sources. Observe the storage temperature (−15 °C to +60 °C).

UNPACKING

After unpacking, check the motor for damage, e.g. to the diaphragm cover, housing, end bell, connection and motor cable. Immediately inform the supplier of any damage.
DANGER Danger to life by electrocution if the motor cable is damaged — do not install the motor or put it into operation.

TRANSPORT

DANGER Falling loads may cause lethal injuries or crush parts of the body. Nobody may stand under suspended loads. Only use approved hoisting gear, selected for the total weight to be transported.

DISPOSAL

To avoid environmental damage: avoid contamination by lubricants, detergents etc.; dispose of the motor and packaging in a proper, environmentally sound manner; observe local regulations.

ASSEMBLY & OPERATING INSTRUCTIONS

Motor operation

Proper motor cooling

CAUTION
Damage to the motor and motor cable due to overheating! Make sure that the coolant flow speed along the motor is sufficient, and that the short motor cable is always fully surrounded by the pumped medium for proper cooling.

If the required minimum coolant flow speed cannot be reached (e.g. if the inlet opening of the well is above the motor, or in large-diameter wells), fit a cooling tube that encases the entire motor and the pump water inlet — the motor is then force-cooled.

- Provide one spring-loaded check valve in the rising main if none is fitted in the pump — no further than 7 m from the pump.

Figure — cooling tube

- Install a level sensor in wells with highly varying water inflow.

Switching on the motor

- Make sure all steps of the previous chapter have been carried out properly, then switch on with the mains switch in the control cabinet.
- Measure the motor operating current in every phase, the mains voltage with the motor running and the level of the pumped medium.
- Immediately switch off if: the nominal current on the type plate is exceeded; voltage deviates by more than −10 % / +6 % from nominal; there is a risk of dry running; or a phase current deviates by more than 5 % from the mean of the three currents.

Operation with frequency converter

- Observe the converter's operating manual.
- Motor current must not exceed the nominal current on the type plate at any point of the regulating range.
- Set frequency limits: min. 30 Hz, max. the nominal motor frequency (50 or 60 Hz).
- Limit voltage peaks at the motor: max. rise 500 V/µs, max. peak 1,000 V.
- Ramp-up 0 → 30 Hz and ramp-down 30 → 0 Hz: max. 1 second.
- Size the cable for the additional power loss of filters.
- Maintain the required coolant flow speed also in converter operation.

Operation with soft starter

- Observe the soft starter's operating manual.
- Set the starting voltage to 55 % of nominal voltage and ramp-up / delay times to max. 3 seconds.
- Bridge the soft starter with a contactor after run-up.

Maintenance & service

The motor is maintenance-free; no maintenance or service activities are necessary.

Troubleshooting

Fault	Remedy
Unusual noises, problems with proper running, or the pump switching on and off too frequently	Look for the cause of the fault on the pump unit.
The pump repeatedly switches off	Have the insulation resistance checked by a professional (see insulation-resistance tables). If no cause is found in the motor or motor cable, have the electrical system checked.

CHECKING & FILLING

Motor fluid, name plate & insulation

DANGER
Motor damage due to insufficient filling! Fill the motor with sufficient motor fluid (clear water). Wear safety goggles and gloves when filling and draining the motor.

Filling volume

6″ motors	approx. 5 litres
4″ and 8″ motors	pre-filled at factory — refill to full

Determine the age of the motor

S. No. **4 23 08 0001**

- Motor size (4 = 4″, 6 = 6″, 8 = 8″)
- Year of manufacture (e.g. 2023)
- Month of manufacture (e.g. 08 = August)
- Production serial number

Insulation resistance · 20 °C / 500 V DC

Condition	
New motor without drop cable	> 200 MΩ
Used motor without drop cable	> 20 MΩ
New motor with drop cable	> 2 MΩ
Used motor with drop cable	0.5–2 MΩ

The 8″ section of the source gives no insulation values; the 6″ values are commonly applied.

Cable sizing · direct start (DOL)

— max. cable length (m)

RATING		CABLE SIZE (MM²) — COPPER, 70 °C RATED INSULATION															
kW	HP	2.5	4	6	10	16	25	35	50	70	95	120	150	185	240	300	400
4	5.5	180	290	430	710												
5.5	7.5	130	210	320	530	830											
7.5	10	80	150	230	390	610	940										
9.3	12.5	80	130	190	320	510	770										
11	15	60	100	160	270	430	650	890									
13	17.5		90	140	230	370	560	770									
15	20		80	120	200	320	490	880	920								
18.5	25			100	160	260	400	540	740	980							
22	30				140	220	340	470	630	840							
26	35				120	190	290	380	540	720	920						
30	40					150	250	340	470	520	790	940					
37	50					130	200	280	380	600	640	760	890	1020			
45	60						170	240	330	440	570	890	810	940			
52	70						150*	210	290	390	500	800	710	820	980		
55	75						140*	190	270	360	470	560	660	770	910		
60	80							180	250	340	440	530	630	730	870	1010	
67	90							160*	220	300	390	460	550	630	750	860	1000
75	100								200*	270	350	420	490	570	680	780	910
83	111								180*	250	320	390	450	530	630	730	850
85	114									230	290	350	410	480	570	650	750
93	125									220*	280	340	390	460	550	620	720
110	150										220	270	310	360	420	480	550
130	175										200*	240	280	330	390	440	520
150	200											200*	240	280	330	380	440
185	250													210*	250	280	330

Maximum cable length in metres for 400 V / 50 Hz, 5 % voltage drop, 30 °C ambient. * only for individual-conductor cable. Values transcribed from the source; non-increasing lengths at 45 kW / 52 kW (120 → 150 mm², DOL) and 85 kW (25 → 35 mm², Y-Δ) are printed as in the source — please confirm.

Cable sizing · star-delta start (Y-Δ)

— max. cable length (m)

RATING		CABLE SIZE (MM²) — COPPER, 70 °C RATED INSULATION															
kW	HP	2.5	4	6	10	16	25	35	50	70	95	120	150	185	240	300	400
4	5.5	270	430	640													
5.5	7.5	190	310	480	790												
7.5	10	130	220	340	580	910											
9.3	12.5	120	180	280	480	760											
11	15	80	150	240	400	640	970										
13	17.5	70	130	210	340	550	840										
15	20	70	120	180	300	480	730	1020									
18.5	25	60	90	150	240	390	600	810									
22	30		70	120	210	330	510	700	940								
26	35		60*	100	180	280	430	580	810								
30	40			90	150	240	370	610	700	930							
37	50				120	190	300	420	570	750	950						
45	60				100	160	250	360	490	550	850						
52	70				90*	150	220	310	430	580	750	800					
55	75					130	210	280	400	540	700	840	890				
60	80					120	190	270	370	510	660	790	940				
67	90					100	180	240	330	450	580	690	820	940			
75	100					90*	150	210	300	400	520	630	730	850	1020		
83	111						130	190	270	370	480	580	670	790	940		
85	114						180*	180	250	340	430	520	610	720	850	870	
93	125						120*	160	240	330	420	510	580	690	820	830	
110	150							130*	190	250	330	400	460	540	630	720	820
130	175								160*	220	300	360	420	490	580	660	780
150	200								150*	190	250	300	360	420	490	570	660
185	250										180*	240	270	310	370	420	490

Maximum cable length in metres for 400 V / 50 Hz, 5 % voltage drop, 30 °C ambient. * only for individual-conductor cable. Values transcribed from the source; non-increasing lengths at 45 kW / 52 kW (120 → 150 mm², DOL) and 85 kW (25 → 35 mm², Y-Δ) are printed as in the source — please confirm.

OSWAL

True Partner!

Oswal Pumps Limited

Pumps & Motors · Solar | Domestic | Agriculture | Industrial

PAN-INDIA PRESENCE

GLOBAL PRESENCE

ADDRESS

Oswal Estate, NH-1, Kutail Road,
P.O. Kutail, District Karnal – 132037
(Haryana) India

SALES / WHATSAPP

+91-98962-66691

TOLL-FREE

1800-120-1882

EMAIL

info@oswalpumps.com

WEB

www.oswalpumps.com

NSE: **OSWALPUMPS**

BSE: **544418**

ISO 9001:2015 certified company

Specifications are subject to change without notice owing to continuous product improvement.